IOTAFLOW
SYSTEMS PVT. LTD

VN_Compact Electromagnetic Flow sensor User Manual

" If You Want To Manage It, Measure It "

www.iotaflow.com

Table of Contents

Chapter 1 Before Using 2
1.1 Safety Instructions 2
1.2 Flow Sensor 4
Chapter 2 Piping 6
2.1 Precautions for Piping 6
2.2 Piping Conditions 7
Chapter 3 Wiring 8
3.1 Precautions for Wiring 8
3.2 Wiring Method 9
Chapter 4 LED Display 10
4.1 Flow Rate (Green LED) 10
4.2 Alarm (Red LED) 11
Chapter 5 Troubleshooting 13
Chapter 6 Product Specifications 14
6.1 Performance Guaranteed Scope and Other Specifications 14
6.2 Accuracy 16
6.3 Output Specifications 19
Chapter 7 Product Warranty 22

Chapter 1 Before Using

1.1 Safety Instructions

Before reading further, please note the following important safety precautions. Please read and fully understand the following. This instruction manual is also required for maintenance. After reading, please keep this manual in an accessible location.

The symbols below indicate the precautions you should take to ensure safe use of this product and to prevent accidents or failures.

Symbol	Scope of precaution
DANGER	Incorrect handling without regard to the information on this label may result in death or serious injury.
WARNING	Incorrect handling without regard to the information on this label may result in injury.
CAUTION	Incorrect handling without regard to the information on this label may result in physical damage (product failures, etc.).

There are some important points you should understand when using this product.
Be sure to observe the following precautions. These are very important to prevent danger to human body and accidents.

◎ Precautions for proper use

DANGER	● Do not use this product for applications requiring safety, such as nuclear, railroad, airplane, automobile, and recreational equipment. ● Do not alter the product. ● This product is not intended for sanitary use and must not be used for food, beverages, or medical solutions. ● This product is not explosion-proof and must not be used in an atmosphere containing flammable gases, etc.
CAUTION	● Do not expose the product to excessive shock by dropping or hitting it, etc. When handling, be sure to hold the body, not the cable.

◎ Measurable fluids and working environment

DANGER	● Do not use the product for corrosive fluids.
CAUTION	● Do not use the product for applications not covered by the specifications. (For specifications, refer to “Chapter 6 Product Specifications.”) ● Measurable fluids are fluids with a conductivity of 50μS/cm or more. Observe the conductivity. Note that this product is not intended for fluids with low conductivity such as pure water and oil. ● Never install the product where there is a risk of fluid freezing or where the fluid temperature may exceed 60ºC. When using the product at low temperatures, take anti-freezing measures such as adding antifreeze. ● Use the product within the following ambient temperature and humidity ranges. -20ºC to +60ºC, 35 to 85%RH (no condensation) ● The product may malfunction if current flows through the fluid. ● Observe the maximum working pressure (1MPa). ● This product is not of a perfect waterproof structure. (IP64) Do not install the product outdoors or where it may be submerged in water. ● Do not install the product in areas exposed to strong light such as direct sunlight or to heat radiation. ● Keep the product away from strong magnets and magnetic fields. ● Mix fluids with different quality downstream, if applicable.

◎ Precautions for proper operation

CAUTION	● This product is not intended for transaction certification. ● The first 20 seconds after turning the power on is a waiting time for stabilization. Do not use the display or perform output. ● If you want to turn the power back on after turning it off, wait at least 7 seconds after turning it off before turning it back on.

1.2 Flow Sensor

◆ Appearance, shape, and display of the main body

Lead wire color	Description
Red	Power +
Blue	Power -
White	Output 1
Yellow	Output 2

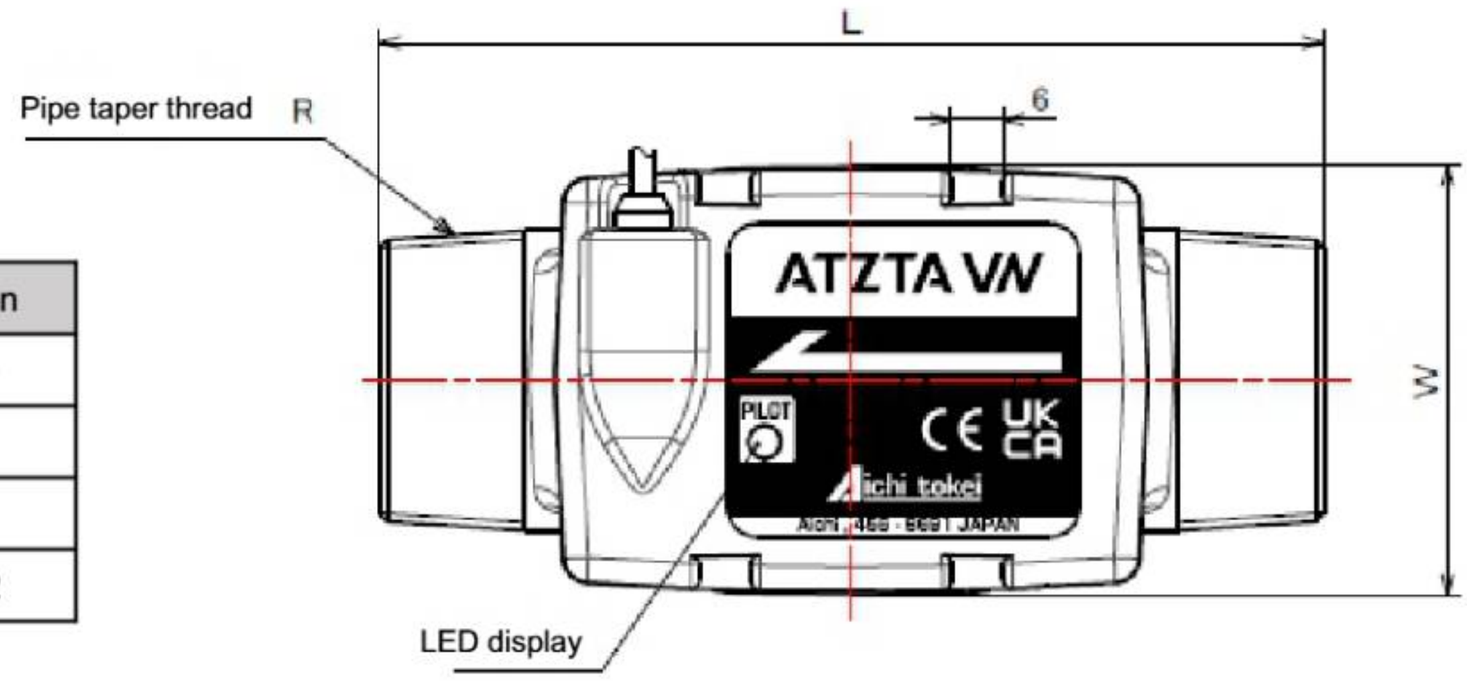

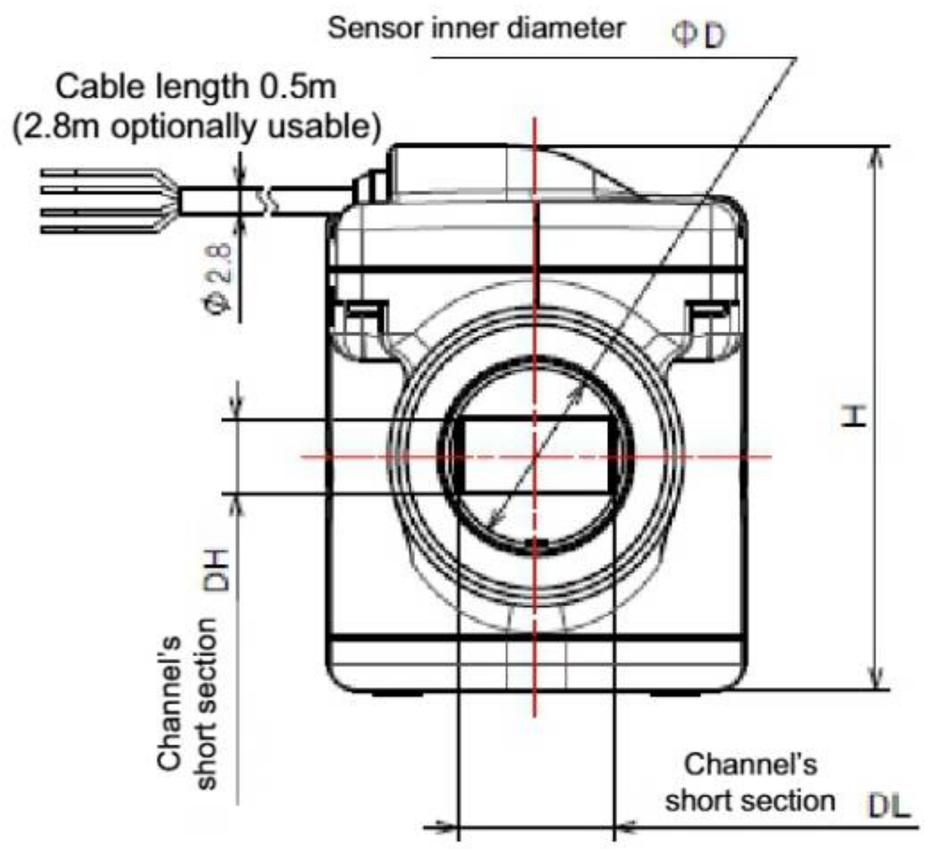

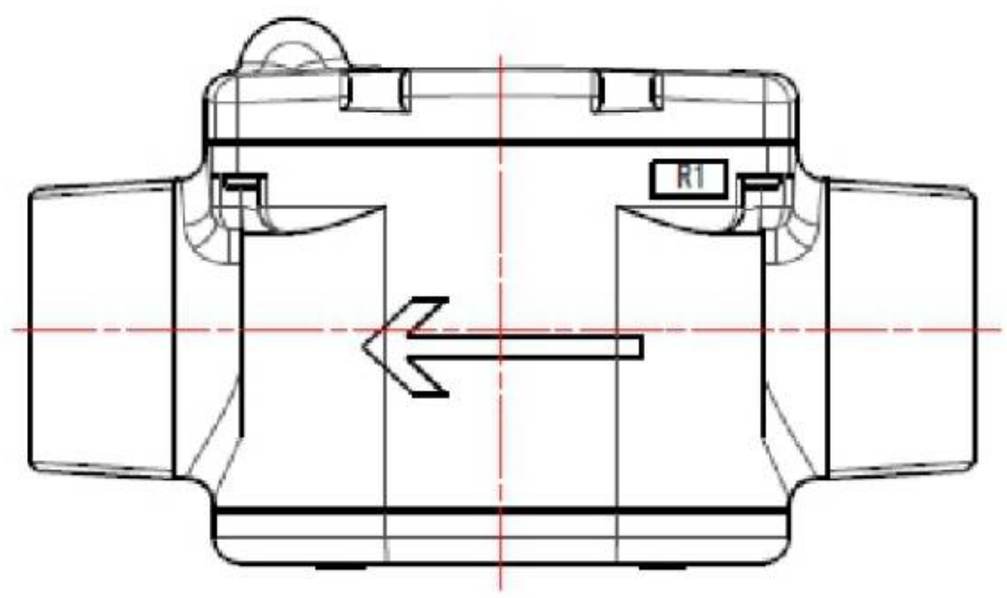

◇ External dimensions and masses

		VN05M	VN05S	VN10S	VN20S
Dimension	φD	φ5.2		φ10	φ20
	DL	4.6		9	18
	DH	1.2	2.4	4.4	8.6
	L	85		95	110
	W	47		47	49
	H	49		52	62
	R	R1/4		R1/2	R1
Mass		Approx. 190g		Approx. 190g	Approx. 290g

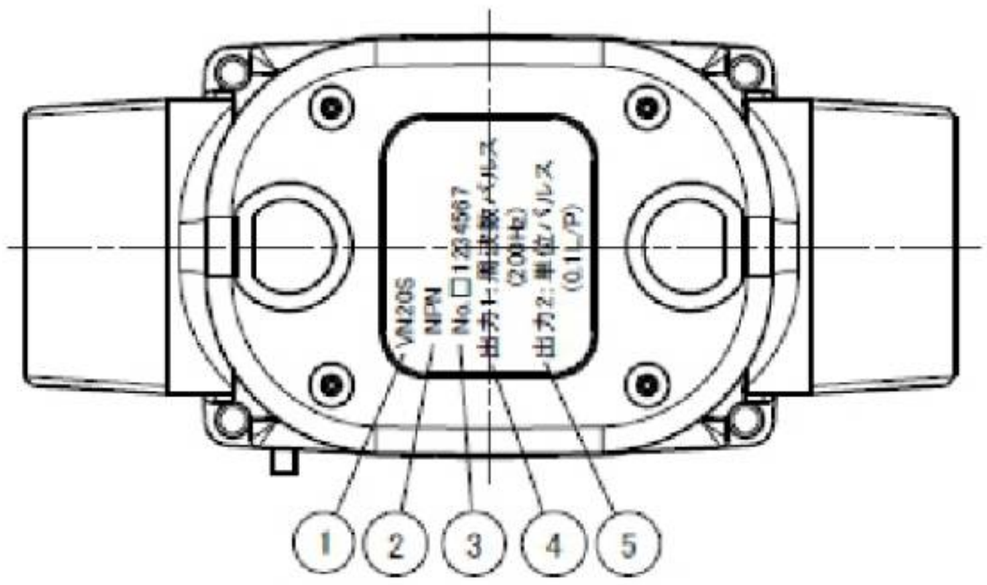

◇ **Information on the label on the back of the flow sensor**

No.	Information
(1)	Model : VN ○○ □ S: Standard flow-rate measurement M: Microflow measurement (nominal diameter 5mm only) 05: Nominal diameter 5mm 10: Nominal diameter 10mm 20: Nominal diameter 20mm
(2)	Output specification: NPN output or PNP output
(3)	Serial number
(4)	Contact output 1 setting value
(5)	Contact output 2 setting value

*Please check that the information on the labels on the back of the flow sensor and the top of the packaging box is the same as the specifications of the product you ordered.

There are 2 output channels. Please check that the specifications of both the 1ch and the 2ch are correct.

For details, refer to “6.3 Output Specifications.”

Chapter 2 Piping

2.1 Precautions for Piping

Be sure to observe the following precautions when piping this product.

 DANGER	● When installing multiple units of this product in parallel, allow a clearance of 20cm or more between them to reduce the fluctuation of detected flow rates caused by electromagnetic interference. ● When tightening to the piping, use the following model-specific tightening torques as a reference. Do not apply excessive torque. Doing so may break the sleeve screw of the sensor, resulting in fluid leakage. VN05M:1.2±0.4Nm VN05S: 3.0±0.5Nm VN10S: 5.0±0.5Nm VN20S: 12± 1Nm If fluid leaks even when the piping is tightened to the torque above, do not retighten it but check the screw and the seal tape for abnormalities. ● Do not install this product on scaffolding.
 CAUTION	● Do not use the product where air enters. Do not install the product in areas prone to air accumulation (such as the upstream side of the downward piping). After installing the product, thoroughly remove air before starting operation. ● Install flow disruptors such as flow-regulating valve on the downstream side of the sensor. ● Do not install the product on the piping system, such as water hammer, that is exposed to impact pressure. ● If foreign matter or oil is found on or inside a new pipe, thoroughly wash the pipe before installation. ● Do not install the product where strong compression force, tensile force, or load will be applied. ● When laying the piping, provide a maintenance space at the installation position. ● Install the sensor making sure that the seal tape does not extend into the piping. When connecting the piping, wrap the seal tape 2 to 3 turns from the position 2mm or more inside the tip of the taper thread of this product toward the opposite side of the thread. If the seal tape protrudes out of the thread, the seal tape is cut by screwing and the chip enters the piping, causing a failure. ● Make sure that the front and rear ends of the connected piping are free from burrs, etc., generated during threading.

2.2 Piping Conditions

○ **Lay the piping according to the flow indicated on the body.**

○ **To avoid the influence of air bubbles, dirt, and other contaminants, it is recommended to install the sensor in such a way that the LED label is parallel to the ground and fluid flows upward.**

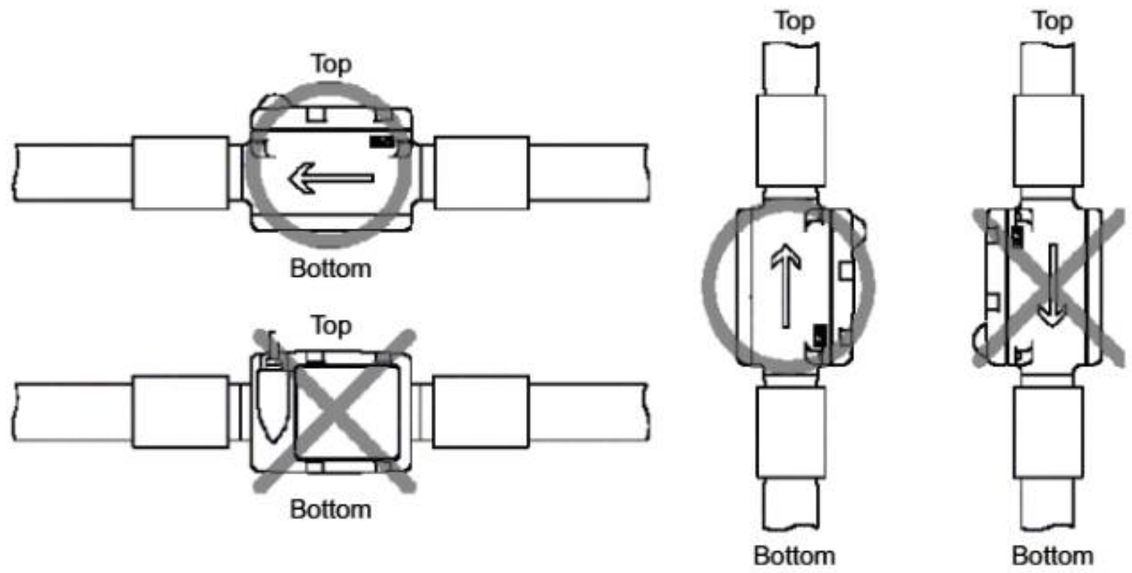

○ **Lay the piping in such a way that it is always filled with fluid.**

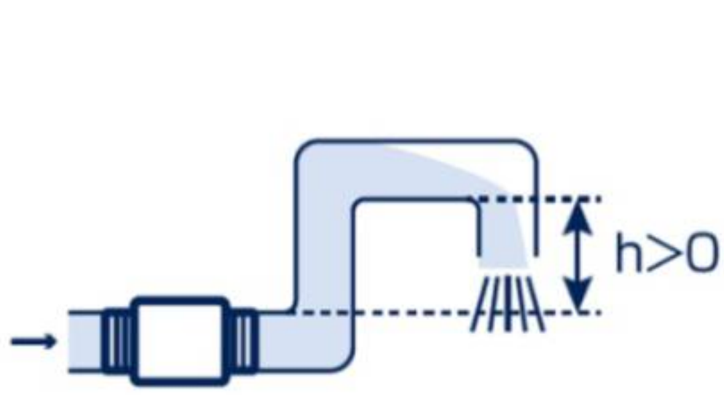

When the downstream side of the flow sensor is open to air, set the discharge port higher than the sensor.

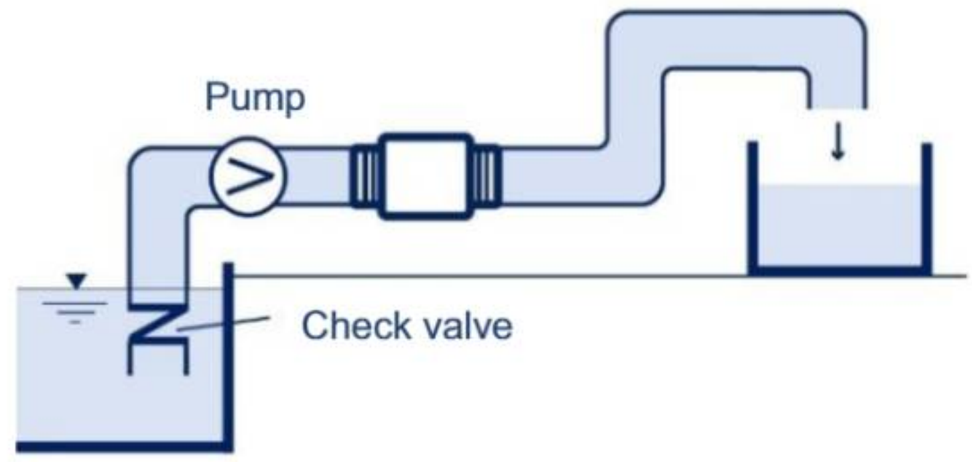

If the check valve is leaking, air will enter when the pump stops, causing the piping to be partially filled. Be sure to prevent leakage.

○ **Please provide straight pipe lengths according to the piping locations.**

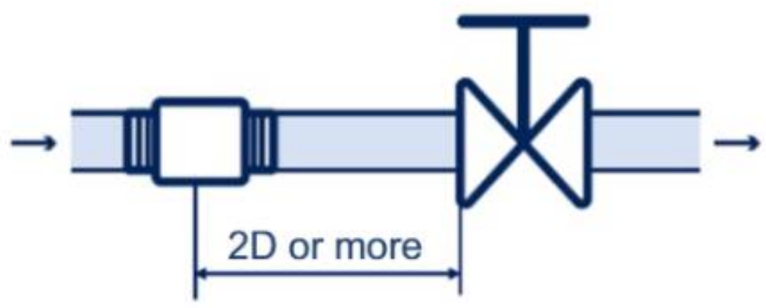

When installing various control valves (including check valves) such as ball valves and butterfly valves, it is recommended to provide a straight pipe length of 2D or more on the downstream side whenever possible.

When using an expansion pipe in the upstream pipe, please ensure a straight pipe length of 10D of more.

Chapter 3 Wiring

3.1 Precautions for Wiring

Be sure to observe the following precautions when wiring this product.

 DANGER	● The operating power of this product is 21.6 to 26.4VDC (24VDC±10%). Connecting 100VAC may cause a fire. ● Lay the wiring in accordance with the instructions in this manual. ● Use the product within the rated range. Do not use it under a load exceeding the allowable load.
 CAUTION	● Do not lay the wiring along with the power line, etc. ● Lay the wiring as far away from the noise source as possible. ● It is recommended to electrically isolate the power source and the receiving instruments from others. ● Do not apply excessive tensile force to the cable. ● Make sure that the cable tip is not submerged in water during wiring work. ● Note that a cable extended to 3m or more does not satisfy the CE marking standard. You can choose a 2.9m cable as an option.

3.2 Wiring Method

Lay the wiring according to the wiring diagram below.

◇ Wire diagram (NPN output)

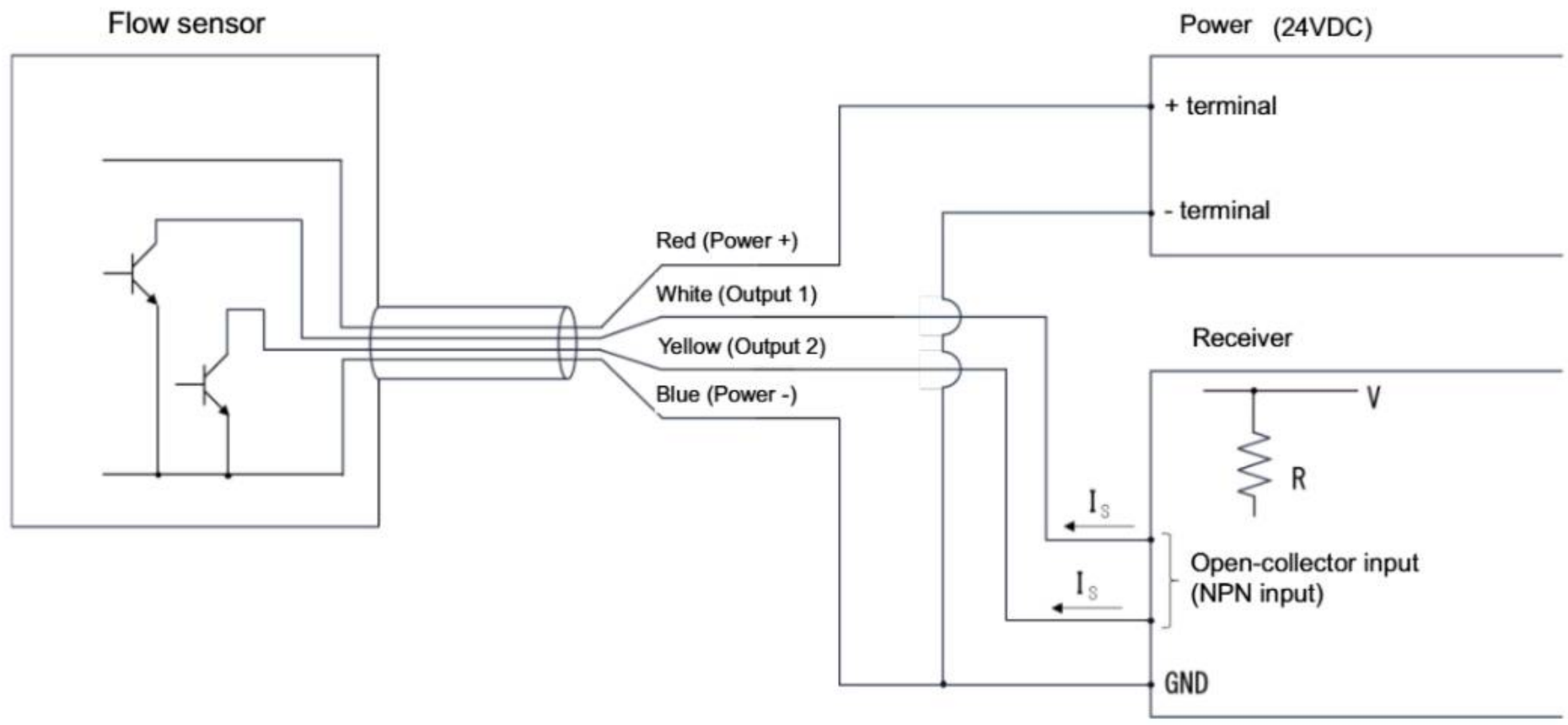

◇ Wire diagram (PNP output)

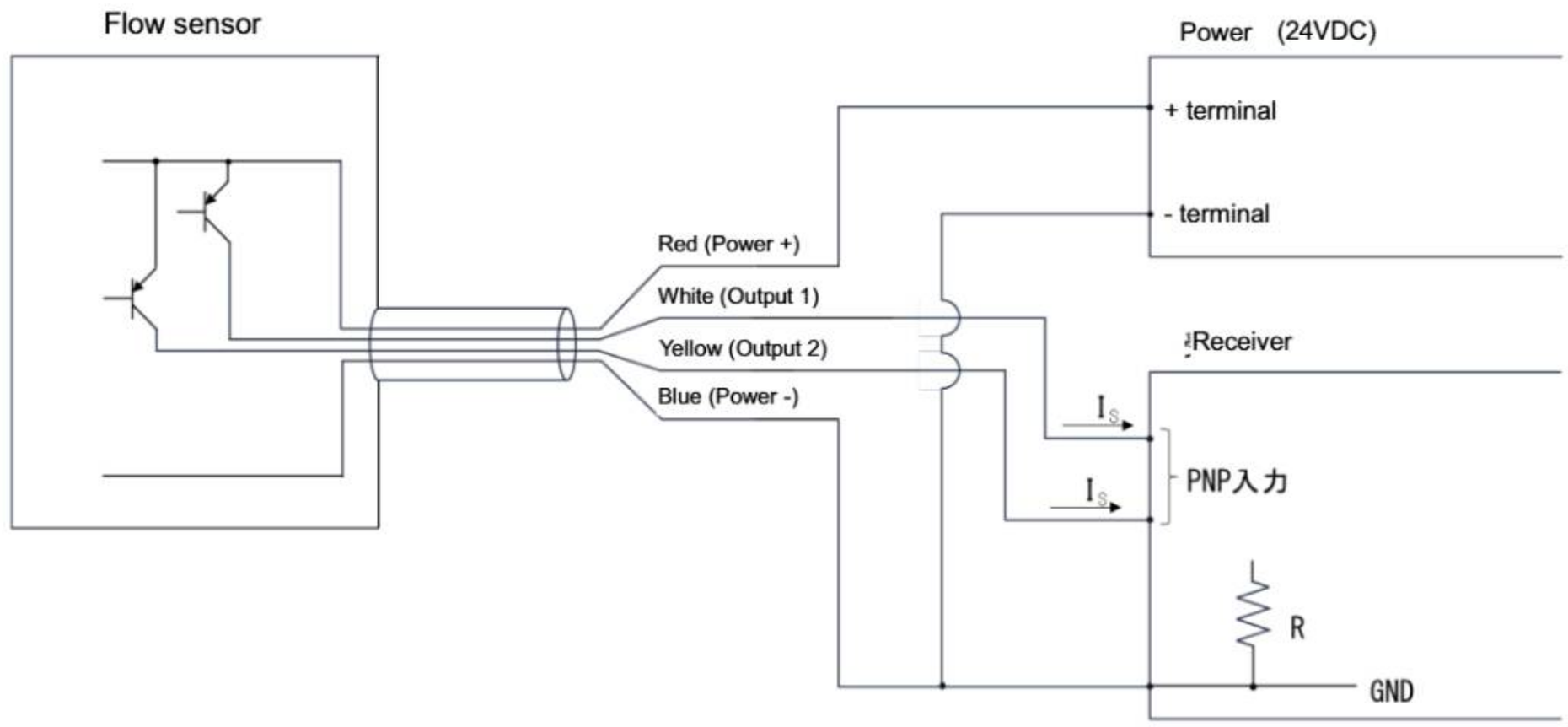

Lay the wiring in such a way that the pulse detection voltage and the output sink current fall within the values in the table below.

	NPN output	PNP output
Pulse detection voltage	30V or less	26.4V or less (Power is supplied from this product.)
Output sink current Is*	20mA or less	20mA or less

$$* \ I_s(\text{Output sink current: mA}) = \frac{V(\text{Pulse detection voltage: V})}{R(\text{Current} - \text{limiting resistor: k}\Omega)}$$

Chapter 4 LED Display

The 2-color, green/red LED indicates either flow rate or alarm information.

Priority is given to the alarm caused by error detection, and only the highest-priority item is indicated.

Green: Flow rates are indicated in 4 patterns with 3-stage flashing lights and a solid light.

Red: Alarms (error detection) are indicated in 6 patterns with 4-stage flashing lights, a solid light, and light off.

4.1 Flow Rate (Green LED)

The display pattern changes according to flow rate as shown in the table and figures below.

Flow-rate range	Display pattern
Below the low flow cutoff flow-rate	Solid on
Between the low flow cutoff flow-rate and 1/3 of the upper-limit accuracy guaranteed flow-rate	2-second flashing cycle Repeat of 1-second solid on and 1-second off
1/3 to 2/3 of the upper-limit accuracy guaranteed flow-rate	1-second flashing cycle Repeat of 0.5-second solid on and 0.5-second off
2/3 or more of the upper-limit accuracy guaranteed flow-rate	0.4-second flashing cycle Repeat of 0.2-second solid on and 0.2-second off

(Between the low flow cutoff flow-rate and 1/3 of the upper-limit accuracy guaranteed flow-rate)

(1/3 to 2/3 of the upper-limit accuracy guaranteed flow-rate)

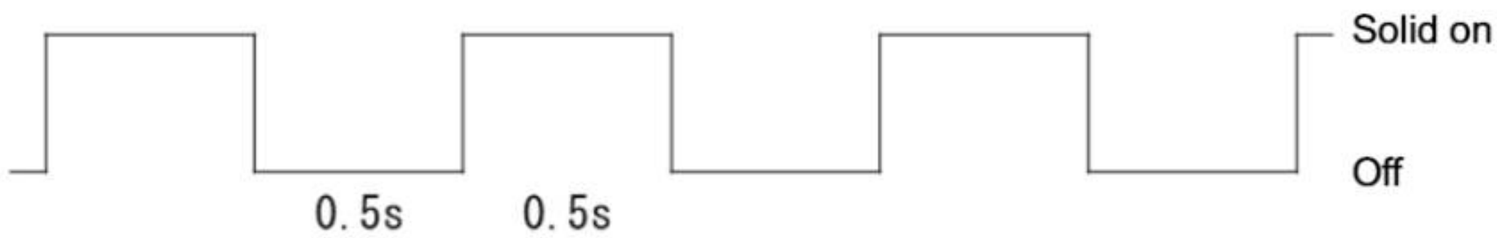

(2/3 or more of the upper-limit accuracy guaranteed flow-rate)

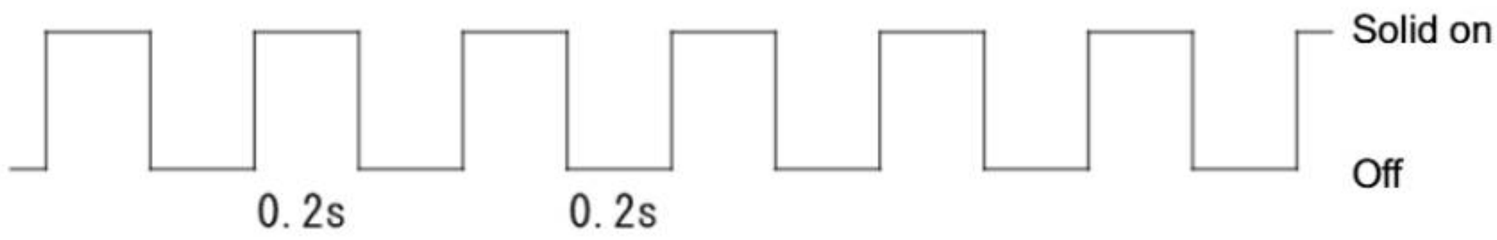

4.2 Alarm (Red LED)

The display pattern changes according to the type of detected errors as shown in the table and figures below.

Error	Priority	Display pattern
Low power voltage detection	1	Green and red lights off
Internal error	2	Solid on
No-water detection	3	Repeat of 0.3-second solid on and 0.3-second off + 1.7-second off as a set
Excessive fluid noise detection	4	Repeat of 0.3-second solid on and 0.3-second off for 3 times + 1.7-second off as a set
Reverse flow detection	5	Repeat of 0.3-second solid on and 0.3-second off for 2 times + 1.7-second off as a set
Excessive flow rate detection	6	Repeat of 0.3-second solid on and 0.3-second off for 4 times + 1.7-second off as a set

No-water detection

Excessive fluid noise detection

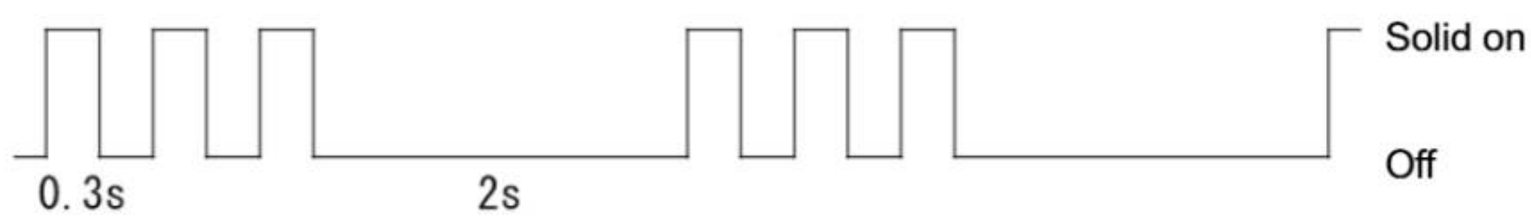

Reverse flow detection

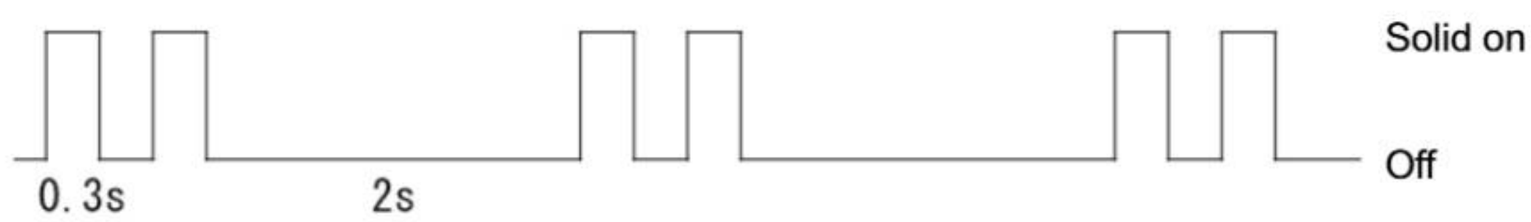

Excessive flow rate detection

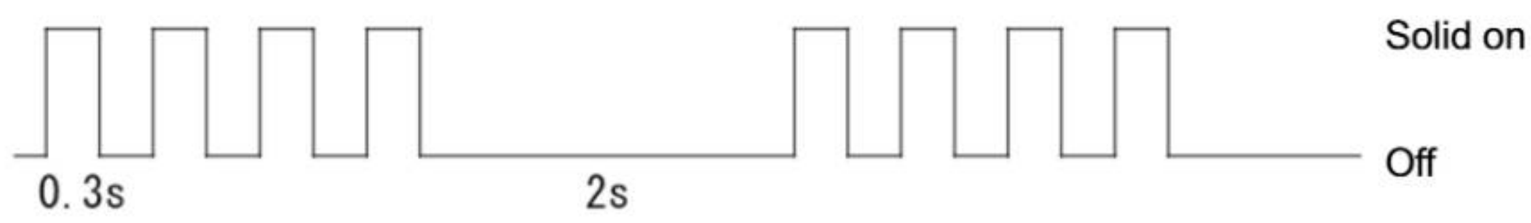

To address each error, consult the measures listed below. If the error persists, please contact our company.
(For inquiries, please refer to “After-sales service” in “Chapter 7 Product Warranty.”)

Error	Description	Measure
Low power voltage detection Note 1	The power voltage has dropped.	Use the product with a power voltage within the specified range.
Internal error	An error has occurred in the internal data or circuit.	Turn the power off, and turn it on again.
No-water detection Note 2, 3	The measurement fluid has flowed out from the flow sensor, causing the piping to be partially filled.	Fill the channel with fluid.
Excessive fluid noise detection	Flow rate cannot be measured properly for reasons such as the presence of abnormal current in the measurement fluid and air entrapment in the fluid.	Turn the power off to check the measurement fluid for abnormalities. If abnormal, eliminate the abnormality, and restart using the product.
Reverse flow detection	The measurement fluid is flowing in the direction opposite to the arrow on the main body.	Check the flow direction of the measurement fluid. Let the fluid flow in the direction of the arrow.
Excessive flow rate detection Note 4	The flow rate exceeds 125% of the maximum accuracy guaranteed flow-rate.	Check the flow rate. If it applies to the value on the left, lower it to 100% or less.

Note 1: When the power voltage drops to 16 to 20.4VDC, a low-power voltage is detected.
Note 2: If the flow sensor where no water has been detected is filled with fluid, normal operation will resume after a recovery time of 20 seconds (standard).
Note 3: It is difficult for VN05M to completely drain fluid for the structural reasons of the channel. Accordingly, even when the channel is partially filled, no-water state may not be detected.
Note 4: Even when an excessive flow rate is detected, flow rates are continuously output (out of the accuracy guaranteed scope).

Chapter 5 Troubleshooting

Category	Phenomenon	Possible cause	Measure/Action
Display	The LED does not turn on.	The wiring is erroneous.	Lay the wiring properly by referring to “Chapter 3 Wiring.”
		The voltage is low.	Measure the power voltage with a tester, etc. Apply the specified voltage.
	The indicated flow rate (flashing cycle of the green LED) fluctuates greatly.	The indicated value fluctuates due to the pulsating flow of the pump.	Mount an accumulator (tank) on the upstream side of the sensor to dampen the pulsating flow.
		The indicated value fluctuates due to the inability to perform correct measurement because of cavitation (air bubbles).	Prevent cavitation. (Noise is heard when cavitation occurs.) Refer to “Chapter 2 Piping.” Continued use may result in breakage.
		The product’s channel is partially filled.	Lay the piping in such a way that the product’s channel is always filled with fluid.
	The green LED flashes even when no fluid is flowing.	The LED sometimes flashes even when no fluid is flowing.	Check that the valves on the front and rear sides of the sensor are completely closed. Check if the conductivity of the measurement fluid is within the specified range.
	The red LED is on.	Refer to “4.2 Alarm (Red LED).”	Take measures by referring to the method specified in “4.2 Alarm (Red LED).”
Contact output	The contact output is off.	The wiring is erroneous.	Lay the wiring properly by referring to “Chapter 3 Wiring.”
		Since the first 20 seconds after turning the power on is a waiting time for stabilization, the contact output does not function normally.	Do not use the display or perform output for the first 20 seconds after turning the power on.
Others	Fluid leaks out.	Tightening torque is insufficient. or the main body is damaged due to excessive tightening torque.	Tighten the piping to a correct torque by referring to “Chapter 2 Piping.”

*If the problem persists after taking the measures above or any other trouble occurs, please contact out company.
(For inquiries, please refer to “After-sales service” in “Chapter 7 Product Warranty.”)

Chapter 6 Product Specifications

6.1 Performance Guaranteed Scope and Other Specifications

Model			VN05M	VN05S	VN10S	VN20S
Nominal diameter			5mm		10mm	20mm
Accuracy guaranteed flow-rate range [L/min]			0.01 to 0.2	0.05 to 1.0	0.5 to 10	3.0 to 100
Flow rate at measurement start [L/min] (low flow cutoff)			0.005	0.025	0.25	1.5
Measurable fluid			Water (tap water)			
Fluid conductivity range			50μS/cm or more			
Fluid temperature range			0ºC to +60ºC (no freezing)			
Working ambient temperature/humidity range			-20ºC to +60ºC, 35 to 85%RH (no condensation)			
Storage ambient temperature range			-20ºC to +70ºC			
Maximum working pressure			1MPa (fluid temperature of 25ºC)			
Pressure loss (maximum accuracy guaranteed flow-rate)			0.02MPa or less			0.05MPa or less
Standard installation position			The LED display to be parallel or vertical to the ground (upward flow) (no air entrapment)			
Flow direction			Arrow direction indicated on the product			
Pipe connection			R1/4		R1/2	R1
Power			21.6 to 26.4VDC (24VDC±10%) *It is recommended to supply power from an isolated power source and connect one power source per VN.			
Current consumption			100mA or less (excluding the current from PNP)			
Response performance			63%-response damping time (Standard): Nominal diameter 5mm, 10mm → 0.5 sec., Nominal diameter 20mm → 2.0 sec. Settable in increments of 0.1 sec. between 0.1 sec. and 600 sec. before shipment			
Cable	Basic specifications		Cable length: 0.5m, 4 cores, AWG28, outer diameter φ2.8, shielded			
	Terminal processing		Remove the coating and twist the core wires.			
	Wiring		Red: Power +, Blue: GND, White: Output 1, Yellow: Output 2			
Protection structure			IP64 or equivalent (indoor specification)			
Mass			Approx. 190g			Approx. 290g
Main material Note 1 (The parts with ○ are wetted.)		Top/bottom cover	PPS			
	○	Body casing	m-PPO	PPS		
	○	Electrode	SUS316L			
	○	Grounding ring	SUS316			
	○	O-ring	FKM			
Others			CE marking, UKCA marking, RoHS directive compliant, positive list-compliant Note 2			

Note 1: Description of material symbols

PPS	Polyphenylene sulfide
m-PPO	Polyphenylene oxide
FKM	Fluoro rubber
SUS316L	Stainless steel
SUS316	Stainless steel

Note 2: The materials are compliant with the positive list under the Food Sanitation Act enforced in June 2020.

Wetted resin part	Usable food					Max. temperature I. ≤ +70ºC II. ≤ +100ºC III. ≥ +101ºC
	Acidic	Oily and fatty	Milk and milk product	Alcoholic beverage	Others	
Body casing (Material: PPS)	○	○	○	○	○	III

6.2 Accuracy

◇ Accuracy requirements

Except for VN05M, unless otherwise specified, accuracy is specified based on the errors of the accumulated amounts in 4 minutes under the conditions in the table below.

For VN05M, the accuracy is specified based on the errors of the accumulated amounts in 10 minutes under the conditions in the table below.

Measurable fluid	Water
Fluid temperature	25ºC
Ambient temperature	25ºC
Fluid conductivity	200μS/cm
Piping	Straight pipe length: Upstream side 5D or more, Downstream side 0

◇ Standard accuracy

- VN05M, VN05S, VN10S

Output pulse	Flow-rate range	
	5% to 20% of upper-limit accuracy guaranteed flow-rate	20% to 100% of upper-limit accuracy guaranteed flow-rate
Unit pulse	±0.4%F.S.	±2.0%RD
Frequency pulse	±0.5%F.S.	±2.5%RD

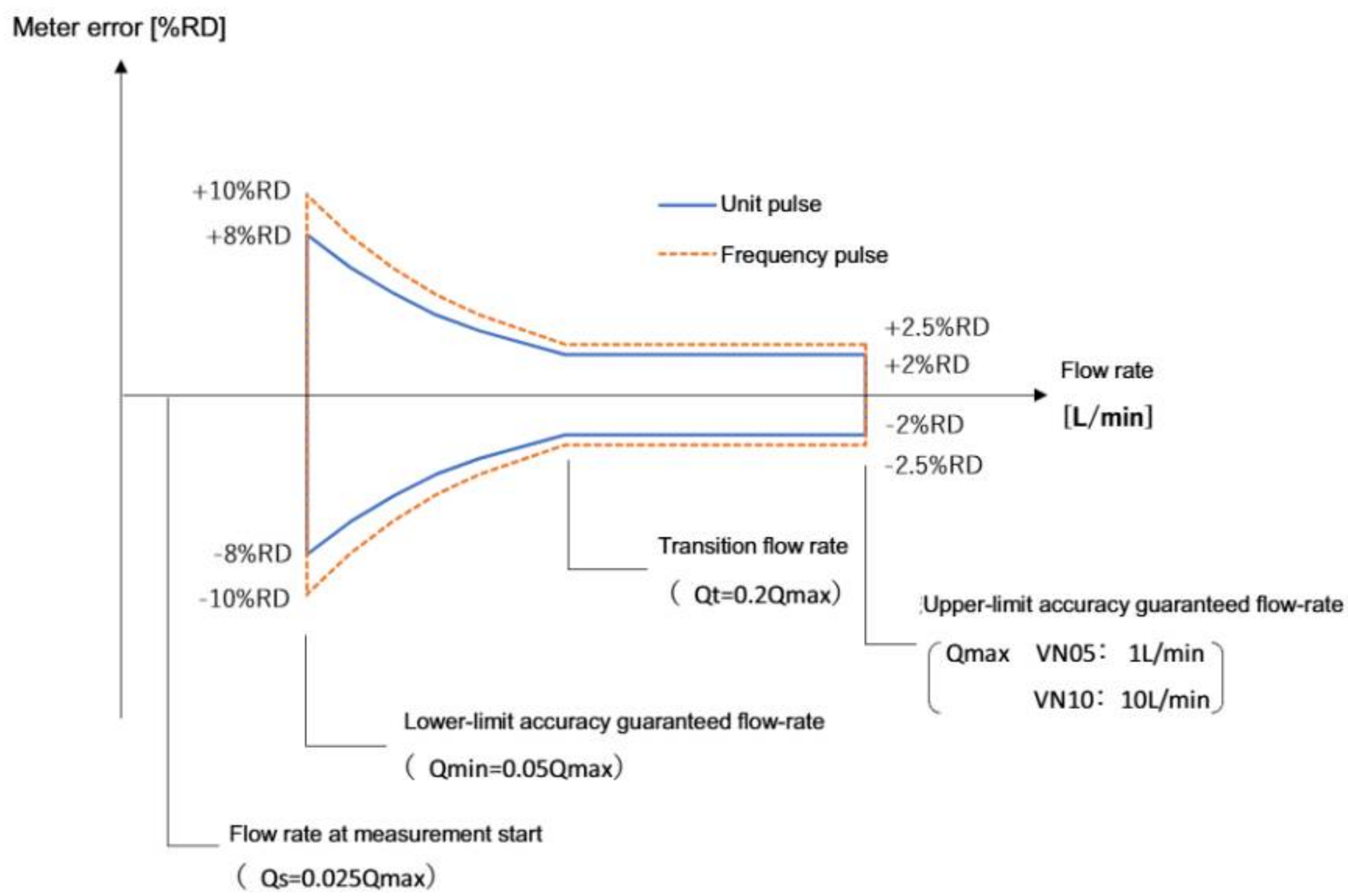

Accuracy guaranteed range (VN05M, VN05S, VN10S)

- VN20S

Output pulse	Flow-rate range	
	3% to 12% of upper-limit accuracy guaranteed flow-rate	12% to 100% of upper-limit accuracy guaranteed flow-rate
Unit pulse	±0.24%F.S.	±2.0%RD
Frequency pulse	±0.3%F.S.	±2.5%RD

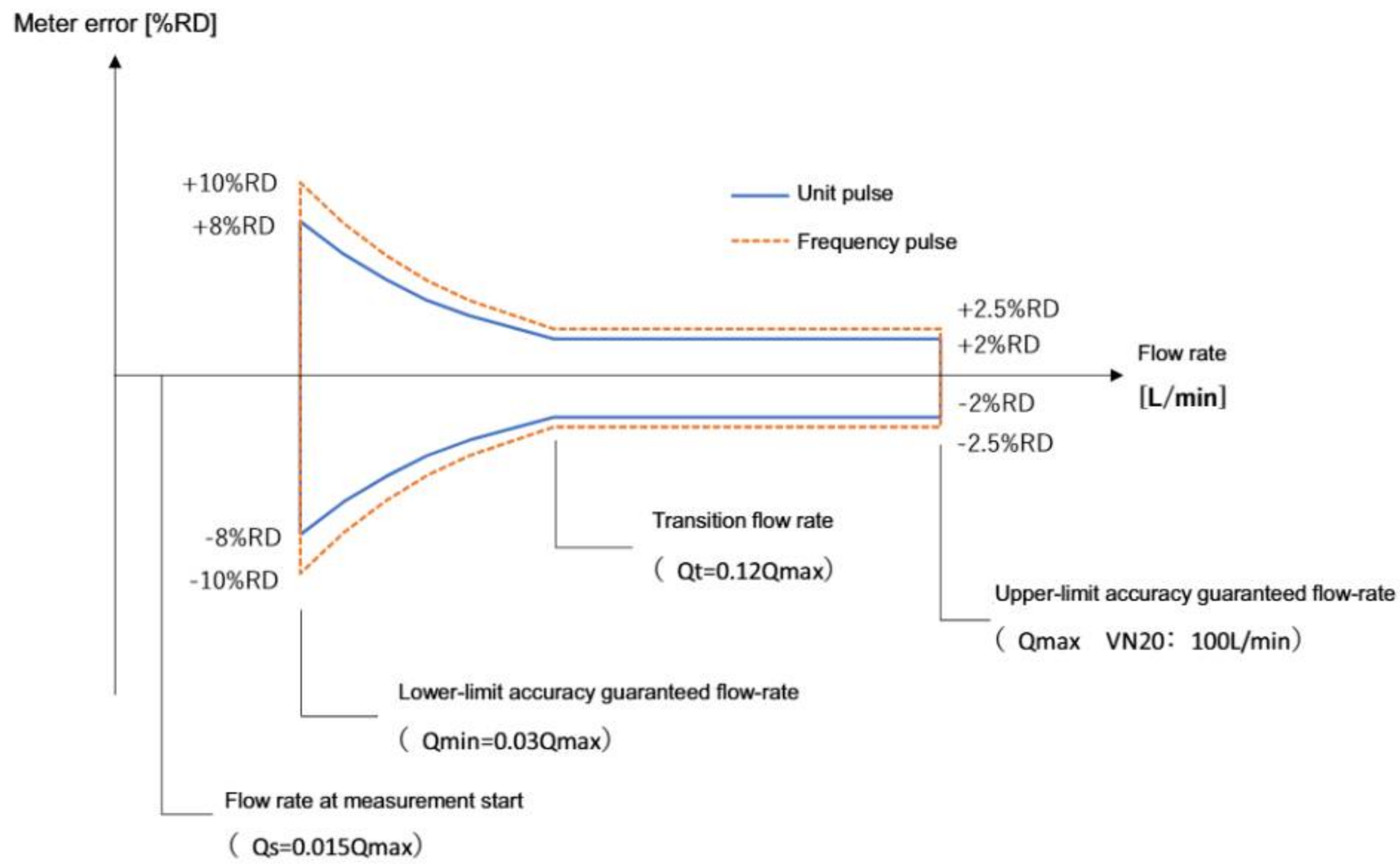

Accuracy guaranteed range (VN20S)

◇ Temperature characteristics

< Fluid temperature >

Changes in meter errors at the unit pulse outputs at fluid temperatures of +5ºC to +60ºC

Model	Upper-limit accuracy guaranteed flow-rate	Change in meter error (25ºC)
VN05M, VN05S, VN10S	5% to 20%	±0.4%F.S.
	20% to 100%	±2.0%RD
VN20S	3% to 12%	±0.24%F.S.
	12% to 100%	±2.0%RD

< Working ambient temperature >

Changes in meter errors at the unit pulse outputs at working ambient temperatures of -20ºC to +60ºC

Model	Upper-limit accuracy guaranteed flow-rate	Change in meter error (25ºC)
VN05M, VN05S, VN10S	5% to 20%	±0.2%F.S.
	20% to 100%	±1.0%RD
VN20S	3% to 12%	±0.12%F.S.
	12% to 100%	±1.0%RD

◇ Conductivity characteristics

Changes in meter errors at the unit pulse outputs at fluid conductivities of 50 to 300μS/cm

Model	Upper-limit accuracy guaranteed flow-rate	Change in meter error (200μS/cm)
VN05M	5% to 20%	±0.4%F.S.
	20% to 100%	±2.0%RD
VN05S, VN10S	5% to 20%	±0.3%F.S.
	20% to 100%	±1.5%RD
VN20S	3% to 12%	±0.18%F.S.
	12% to 100%	±1.5%RD

6.3 Output Specifications

Model		VN05M, VN05S, VN10S, VN20S	
Output type		NPN output	PNP output
Maximum load		30VDC 20mA	26.4VDC (Power is supplied from the main body.) 20mA
Residual voltage when ON		1V or less	2.4V or less
Number of outputs		2ch	2ch
Contact output	Output form	Standard: Normally open, Option: Normally closed Output 1 and 2 can be individually set.	
	Combination	For the combination of output 1 and 2, refer to the contact output selection table below. ◎: Recommended ○: Selectable x: Not selectable **Standard** Output 1: Frequency pulse Output 2: Alarm	

		Output 2		
		Alarm	Switch	Unit pulse
Output 1	Frequency pulse	◎	◎	◎
	Unit pulse	◎	◎	◎
	Switch	◎	◎	○
	Alarm	x	○	○

Flow-rate output	Frequency pulse	Duty ratio: 50±10% Frequency of upper-limit accuracy guaranteed flow-rate (span frequency): Standard: 200Hz Option: 20 to 400Hz, settable in increments of 0.1Hz
	Unit pulse	

Nominal diameter	Pulse unit (Duty 50±10% unless otherwise specified)			
5mm	0.05mL/P Duty 50±30%	0.001L/P (Standard)	0.01L/P	0.1 L/P
10mm		0.01L/P (Standard)	0.1L/P	1L/P
20mm		0.1L/P (Standard)	1L/P	10L/P

Output Specifications (continued)

Switch output		Select either level judgment or window judgment. Output 1 and 2 can be individually selected. Either normally open (standard) or normally closed can be selected. Level 1 and 2 judgment values and hysteresis width (common for level 1 and 2) can be set in increments of 1% between 0% and 100% of upper-limit accuracy guaranteed flow-rate. *If the value of (level judgment value - hysteresis width) is below 0, it cannot be set.
	Level judgment	Flow rate is judged to determine whether it is equal to or less than the level judgment value or is greater than the value. Output 1 is compared to the level 1 judgment value, and output 2 is compared to the level 2 judgment value. When a flow rate is equal to or less than the level determination value, it is judged to be normal, and when it is greater than the value, it is judged to be abnormal. 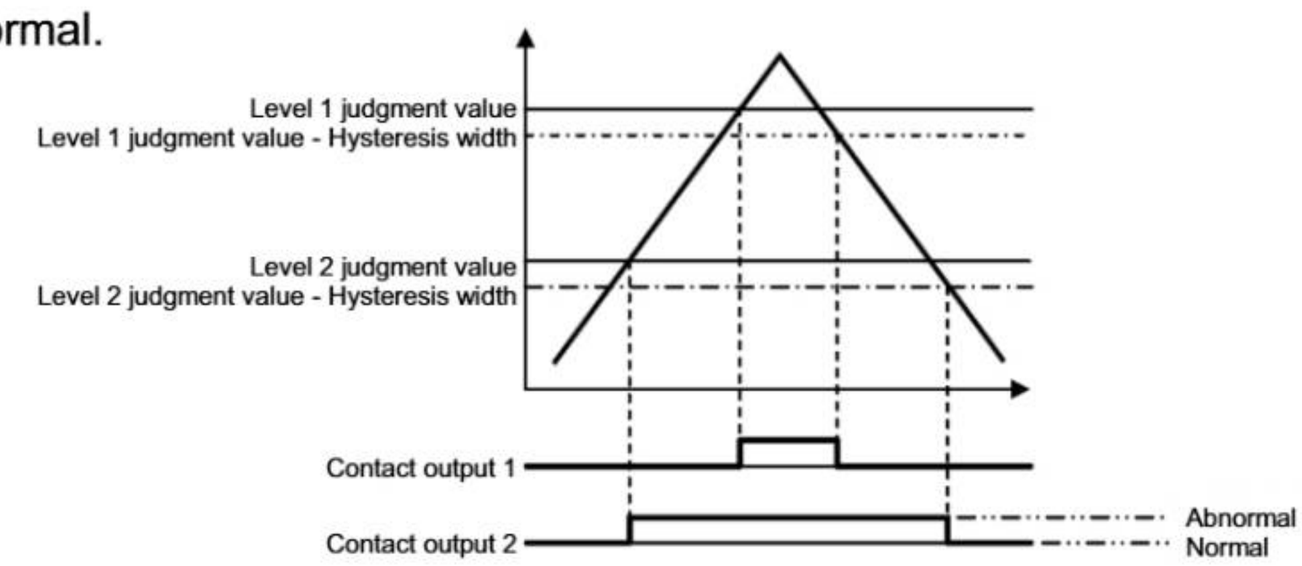
	Window judgment	Flow rate is judged to determine whether it is between the upper limit and the lower limit or is out of that range. When a flow rate is equal to or less than the upper limit and is equal to or above the lower limit, it is judged to be normal. When it is greater than the upper limit or less than the lower limit, it is judged to be abnormal. The upper limit and the lower limit can be set based on either the level 1 judgment value or the level 2 judgment value. 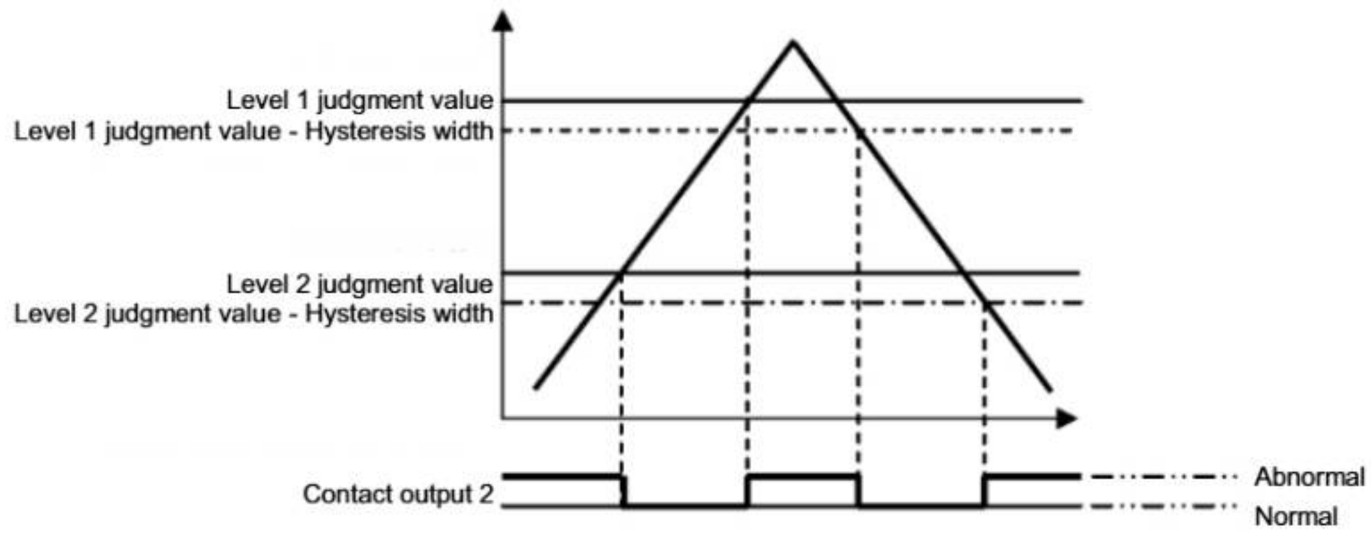

Output Specifications (continued)

Contact output alarms	- Types of contact output alarms: (1) Internal error (2) No-water detection (3) Excessive fluid noise detection (4) Reverse flow detection (5) Excessive flow rate detection (6) Low power voltage detection - Normal state is when no error is detected, and abnormal state is when any error is detected. - Standard: (1) Internal error, (2) No-water detection, and (6) Low power voltage detection is enabled. - Option: (1) to (5) can be individually enabled/disabled. *(6) is requisite and cannot be disabled.
LED display	A 2-color LED (green/red) is provided on the sensor body. Green: Indicates flow rates with flashing lights at 3-stage speeds. Red: Indicates errors by the number of flashing times. For details, refer to “Chapter 4 LED Display.”

Chapter 7 Product Warranty

□ Warranty period

1 year from the date of purchase

□ Warranty scope

This product has been manufactured under our thorough quality assurance system. However, if a failure occurs under normal use within the warranty period for reasons attributable to our manufacturing responsibility, we will repair or replace the product free of charge.

Eligibility for free repair or replacement of a faulty product shall be determined according to our investigation result.

The following items shall be exempted from this warranty scope:

(1) Failure caused by use without regard to the instructions in catalogs, product specifications, and instruction manuals, etc.

(2) Failure caused by disasters such as fire, earthquake, storm and flood, and lightning; and vandalism such as criminal damage

(3) Failure caused by product corrosion due to use in corrosive environment

(4) Failure caused by acts of animals such as dog, cat, rat, and insect

(5) Failure caused by products other than this product

(6) Failure that is unforeseeable with the scientific and technological levels at the time of shipment

(7) Failure caused by repair or alteration by parties other than our company or by those not designated by our company

(8) Failure caused by improper inspection or by maintenance or replacement of consumable parts

Warranty here means the warranty for our product itself, and it does not cover any damage to the customer resulting from the failure of our product (damage/breakage of products other than our product, loss of profits, loss of opportunities, transportation costs, installation costs, etc.)

□ After-sales service

In the event of an abnormality, please contact our branch or sales office after checking the condition of the product and the current failure. (For our sales bases, please visit https://www.aichitokei.net/.)

At that time, please provide us with the information of the product model “VN○○□□” and the product condition as much detail as possible.

For repairs after the warranty period, if the function can be maintained by repair, we will repair the product at your request for a fee.

IOTAFLOW
SYSTEMS PVT. LTD

VN_Compact Electromagnetic Flow sensor User Manual

Contact Us:-

IOTAFLOW SYSTEMS PVT. LTD.

C-2/13, Mayapuri Industrial Area
Phase-II, New Delhi - 110064
Call: +91-9910693866
+91-9779085987
Email: contact@iotaflow.com

Specifications subject to change without prior notice. © Iotaflow Systems Pvt. Ltd.

" If You Want To Manage It, Measure It "

www.iotaflow.com